SAHANZ 2018

HISTORIOGRAPHIES OF TECHNOLOGY & ARCHITECTURE

The bibliographic citation for this paper is:

Farrah, Sally. "The Technology of Axonometry in 1960s Britain: Kenneth Frampton and Peter Eisenman." In *Proceedings of the 35th Annual Conference of the Society of Architectural Historians of Australia and New Zealand: 35, Historiographies of Technology and Architecture*, edited by Michael Dudding, Christopher McDonald, and Joanna Merwood-Salisbury, 174-187. Wellington, New Zealand: SAHANZ, 2018.

Historiographies of Technology and Architecture
Proceedings of the 35th Annual Conference of the Society of Architectural Historians of Australia and New Zealand.
4-7 July 2018 at the Faculty of Architecture and Design, Victoria University of Wellington, New Zealand.

Edited by Michael Dudding, Christopher McDonald, and Joanna Merwood-Salisbury.
Published in Wellington, New Zealand by SAHANZ, 2018.
ISBN: 978-0-473-45713-6

The Technology of Axonometry in 1960s Britain: Kenneth Frampton and Peter Eisenman

Sally Farrah
University of Western Australia

Abstract

The Bauhaus school's utilisation of both the model medium and axonometric projection in the early-twentieth century perhaps best typifies the historical links between technology, rationalisation, and representational techniques. By the late twentieth century, however, the choice by the architect or theorist to utilise either medium has, in some cases, come to represent the exact opposite; an anti-technological ideological position. In light of this transition, this study explores the influence of axonometry as a technique of representation, and its influence on post-modern praxis in England and America. To illustrate, it locates the re-emergence of axonometry and isometry in 1960s Britain through two key cultural producers: Kenneth Frampton, and Peter Eisenman. Specifically, I will conduct a comparison of Frampton's use of axonometry in his co-edited volume with Douglas Stephen and Michael Carapetian entitled British Building: 1960-1964 *(1965). This will be compared with Eisenman's thesis, entitled* A Formal Basis of Modern Architecture, *completed at Cambridge University in 1963, and supervised officially by Sir Leslie Martin, as well as unofficially by Colin Rowe. Eisenman employed isometry as the analytical method to examine canonical modern projects. By 1968 when designing* House I, *Eisenman would shift to wire-frame axonometry, which I demonstrate signifies a seminal development in his oeuvre from perceptual to conceptual representation. This paper hopes to address the following: what historical, social, and ideological meanings did the technology of axonometry acquire in the post-modern period? And through axonometry, how do both Frampton and Eisenman conduct their markedly different anti-technological critiques of modernism? By locating axonometry's first significant post-modern re-emergence in transatlantic culture, this paper provides a theoretical basis to examine contemporary revivals of axonometry in architectural and curatorial praxis.*

Architectural projection as technology

In 1956, James Stirling deemed the ideological schism between European and American architects, as 'the issue of art or technology'.[1] This critique of the Modern Movement was referred to in journals as 'the crisis of rationalism' or the 'dilemma of functionalism'.[2] In Britain, this resulted in a departure from the technological 'Victorian idea of progress' to a humanist emphasis, whereby 'true progress lies in charity, welfare, and personal happiness'.[3] Anti-technological positions emerged in both conservative circles - such as the New Humanism and Townscape[4] - and the 'neo-avant-garde'[5] New Brutalists. In this formative post-modern[6] moment, by the 1960s, a generation of British architects emerged searching for an intellectual and rational theory of form.

To situate this anti-technological debate in a broader historiography, it is important to recognise what Marco Frascari terms the 'double-faced role of technology':[7] that while technology aids the conceptualisation of architecture, it also aids modes of architectural representation. The rise of technological capabilities over the twentieth-century led to the denigration of the Renaissance activity of *disegno* - the act of simultaneously drawing and conceptualising – resulting in the splitting of processes of visualisation and intellection in architectural drawing.[8] The post-modern projections of the 1960s, therefore, can be seen to represent one of two poles of *disegno*: 'the truthful representation of building', or architecture as 'an intellectual, artistic activity'.[9] These complex relationship between the technology of projection and cultural values in architectural production results in the 'inevitably partial'[10] aspect of representation, described by Dalibor Vesely as 'divided representation'; by Robin Evans as the 'translation' between drawing and building;[11] or the 'perspective hinge' by Alberto Pérez-Gómez and Louise Pelletier.[12]

A post-modern understanding of the historical links between the 'double-faced role of technology' and representation, allowed architects to employ 'inevitably partial' projection techniques either to serve a cultural 'participatory' function, or conduct an 'emancipatory' autonomous critique.[13] Vesely has outlined the historical transition from the concept of *technē,* to technique, to technology: where *technē* is understood as the 'art of making'[14] within a social context, technique became emancipated from any political or cultural context.[15] These two anti-technological concepts of *technē* and technique can be evidenced by the post-modern projections of Kenneth Frampton and Peter Eisenman.[16] This paper utilises the theme 'historiographies of technology and architecture' in a two-fold manner: it considers the representational site of drawing as an

architectural technology;[17] and examines how various projection methods represent *anti*-technological positions of Frampton's collective representation of *technē,* or through Eisenman's autonomous representation of technique.[18] While Frampton claims Eisenman's work denies 'the possibility of architecture being an essentially tectonic or institutional discourse,'[19] there are similarities to be found in their anti-technological engagement with the Modern Movement.[20] This is evident in Eisenman's thesis, entitled *A Formal Basis of Modern Architecture* (1963), which included analytic isometrics of works by Le Corbusier; Alvar Aalto; Frank Lloyd Wright; and Giuseppe Terragni,[21] sharing similarities with Frampton's later selection of case studies in *Studies in Tectonic Culture* (1995), and recent curatorial project *The Stagecraft: Models and Photos* (2017).

The first part of this paper examines Frampton's *tectonic* axonometry in his co-edited volume, entitled *British Buildings: 1960-1964* (1965), compared to Eisenman's unsuccessful attempt to represent a *conceptual* isometry in his thesis. Both theorists have a connection to Colin Rowe in their formative moments, as Frampton's edited volume was dedicated to Rowe, while Eisenman's thesis was supervised by Rowe and evidences his direct influence, in Eisenman's 'architectural-historical', as opposed to his later 'linguistic'[22] theoretical approach.[23] The second part highlights a seminal shift in Eisenman's output from his sketch-like thesis isometry, to his technical wire-frame axonometry first utilised in *House I* (1968-69).[24] Eisenman has reflected on this shift in representation in his oeuvre as significant,[25] and while Desley Luscombe has examined Eisenman's use of axonometry from *House VI* onward,[26] there is a paucity of critique on this important shift in representation which this paper investigates. While Rowe's anti-Townscape ideas influenced Frampton, the shift from analytical isometry to wire-frame axonometry in Eisenman's work will be discussed in parallel to Rowe's and Robert Slutzky's concept of 'phenomenal transparency',[27] that identifies a second '"ideology" of axonometry'[28] that emerges in Eisenman's oeuvre as the representation of conceptual autonomy.

While projections are simultaneously 'an autonomous concept and a mode of social production',[29] the spatial and theoretical 'depth'[30] which these projections illustrate pertains to either the collective axonometry of *techne,* or the autonomous axonometry of technique. The Framptonian faction consider projection as 'inherently ontological',[31] and continue the Renaissance orthographic tradition where parallelism and measurability provided 'three-dimensional proof of functioning and buildability',[32] whilst also upholding the traditional role of the drawing 'to engage the social'.[33] This tectonic discourse inherits humanist ideas, retaining the importance of the centrality of the body to architectural

experience, where the drawing is perceived as 'the embodiment of architectural ideas'.[34] On the contrary, Eisenman interprets axonometry's objectivity as a technical quality that 'favours the autonomy of the object'[35] and the representation of architecture's *conceptual* forms rather than perceptual form.[36] This post-modern group utilises axonometry against the tectonic 'nineteenth-century tradition',[37] liberating the architectural object from a historical or social context.[38] The comparison of Frampton's and Eisenman's projections that follows reveals dichotomies in their anti-technological positions between semi-autonomy and autonomy, *techne*-technique, percept-concept, and actual-virtual.[39]

Axonometry of *techne* in *British Buildings: 1960-1964* (1965)

While Frampton would later define his tectonic theory as the tripartite relationship of skin-core dialectic (tectonics), *typos* (site), and typology,[40] two technologies of axonometry in his edited volume *British Buildings* (1965) visualise his theory: the exploded or interior projection displaying tectonics and typology (Figure 1), or the 'bird's-eye'[41] axonometric showing *typos* and typology (Figure 2).

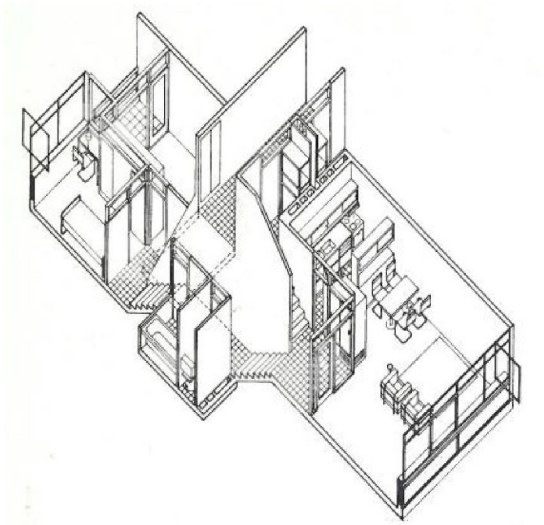

Figure 1. Flats at Green Park (1960) by Douglas Stephens and Partners (Carapetian, Frampton, and Stephens (eds.), *British Buildings,* 83).

Figure 1, produced by the firm during Frampton's employment between, demonstrates an emphasis on surface and the depiction of utility. This is the only project Frampton would design and realise as a practitioner, and the same projection was published prior, under his technical editorship of *AD*.[42]

While Charles Jencks wrote that the dedication to Rowe 'caused some consternation because it was never explained or made explicit',[43] it is an important to mention Rowe's writing of the 1950s and its implicit impact on the ideological choice of both Frampton and Eisenman to employ axonometry. While Rowe utilised two-dimensional diagramming as inspired by his mentor Rudolf Wittkower,[44] his analyses focused on the importance of both elevation and plan, or in his terms 'character' and 'composition'.[45] Rowe's writings represented a search for a 'theory of contemporary vision'[46] and the desire to open an alternate path to the contemporaneous Townscape movement.[47] Isometry and axonometry, therefore, allowed Frampton and Eisenman the simultaneous representation of *both* character and composition. In this light, Frampton's and Eisenman's earliest projections forged an *intellectual* counter-culture to the *perceptual* picturesque tradition of Townscape, where the introduction of measurable *visual* depth aimed to introduce an *intellectual* depth.[48]

The use of both interior or exploded axonometry in *British Buildings* (1965) combine 'abstract geometries of form with the contingencies of material habitation'[49] through the inclusion of elements such as furniture and stairs. Unlike wire-frame projection which positions an 'analytical framing of the viewer',[50] solid projection favour 'the perceptual framing of the viewer', where the articulation of materiality establishes scale, and also highlights the division of 'exterior-interior' illustrating the tectonic interplay of skin and core. Historically, the solid exploded axonometry in *British Buildings* (1965) serves a similar role to Auguste Choisy's nineteenth-century worms-eye axonometry,[51] exploiting the 'spatial dynamism of tectonic space'.[52] While the viewer 'does not exist in the world of parallel projection', one is enticed into the space, introducing 'a human sense of dwelling within a rational technical abstract representation'.[53]

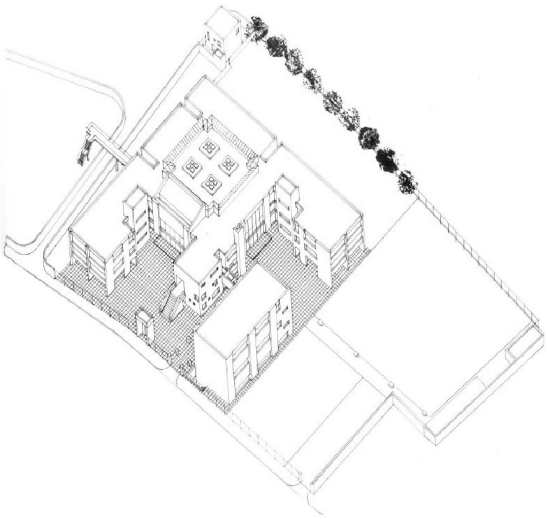

Figure 2. Secondary School (1964) by Alan Colquhoun and John Miller (Carapetian, Frampton, and Stephens (eds.), *British Buildings,* 91).

In an example of birds-eye axonometry from the edited volume, drawn by the firm of Alan Colquhoun[54] and John Miller (Figure 2), rather than materiality, scale is established through depicting the *topos* of vegetation and roads. These bird's-eye axonometrics, showing both context in elevation and plan, rigorously critique the Townscape visual concept of *genius loci*.[55] To conclude on the axonometry of *techne* evident in *British Buildings* (1965), these modes of exterior and interior solid axonometry represent the homology between the body, place, and technique that would later become central to Frampton's own writings on tectonics.[56]

Isometry of *techne* in Eisenman's thesis (1963)

To summarise Eisenman's thesis, his counter-position to Townscape is clear as he proposes a system to 'deny the picturesque',[57] by excising 'perceptual references'[58] of form. Eisenman utilises isometric projection to promote his volumetric theory, and two-dimensional drawings represent precedents that do not adhere to his proposed rational framework. Two types of three-dimensional projections are evident in the thesis: solid isometry (Figure 3); and solid perspectives, most probably traced from photographs.[59]

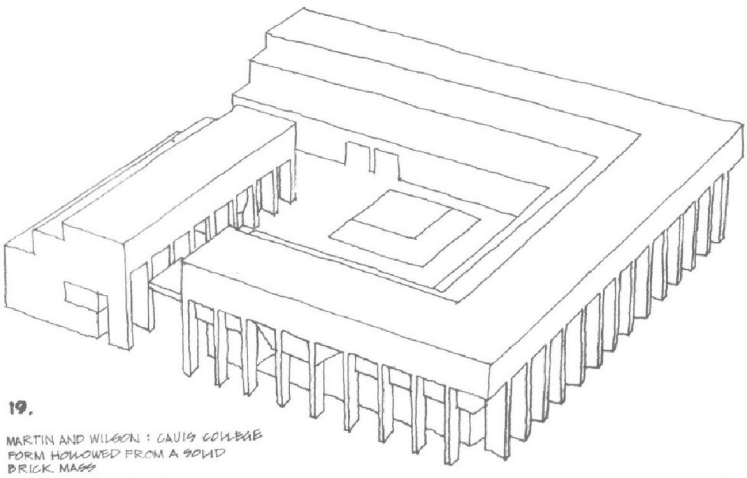

Figure 3. Typical isometric in Eisenman's thesis (Eisenman, *The Formal Basis of Modern Architecture*, 24).

Figure 3, a typical isometric in his thesis, omits the tectonic details of site, surface, and utility. Unlike the previous axonometrics (Figures 1 and 2), isometry distorts the plan, which when coupled with articulating only exterior surfaces, denies a functionalist

representation. Eisenman's thesis aimed to lay the theoretical foundations to his conceptual architecture that he would later develop in his *Houses* series (1969-1973).[60] Despite his exclusion of site, surface, and utility, I propose that these projections remain in the realm of the *perceptual*: firstly due to their opacity, and secondly the consequence of isometry's flattening in the vertical axis, which serves to anchor the forms to the ground, becoming 'fossilized in time and space'.[61] Therefore, Eisenman's isometry does not present a conceptual or 'virtual' form, and remains depicting an 'actual'[62] formalism.

From *techne* to technique: Eisenman's axonometry in *House I* (1967-68)

Between Eisenman's thesis and *House I*, Rowe and Slutzky would publish the first of two 'Transparency' papers, analysing paintings and façades to present a novel concept of 'phenomenal transparency'. Rowe and Slutzky would differentiate between a 'literal' and 'phenomenal transparency', the latter inspired by Gyorgy Kepes's definition of 'apparent transparency': that of 'a simultaneous perception of different spatial locations'.[63] In the following analysis, I will demonstrate how through the qualities unique to the technology of axonometry, Eisenman's successful proposition and representation of a *conceptual* architecture in *House I* critiqued three aspects of Rowe's and Slutzky's *perceptual* framework.

Similar to in his thesis, the drawings of *House I* omit site, surface, and utility. However, in the first projection for *House I* (Figure 4), Eisenman alters his drawing method in two ways: from solid to wire-frame projection to represent conceptual form and achieve reversibility; and from isometry to axonometry to achieve autonomy.

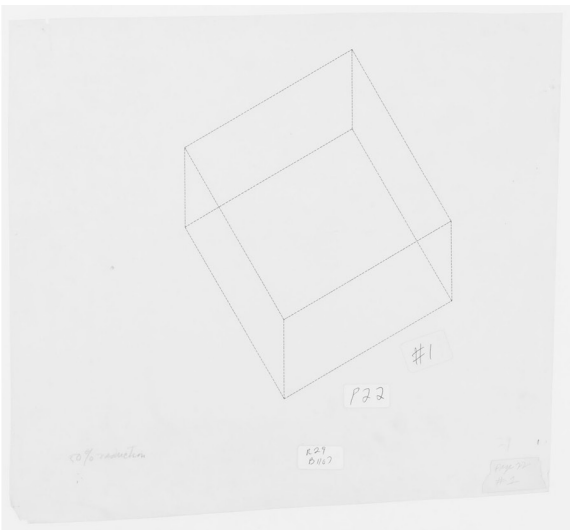

Figure 4. Axonometric for *House I* (Eisenman, CCA archives, c.1967).

Eisenman's shift from isometry's flattening to axonometry's true proportionality is the first suggestion of a shift from representing *perceptual* to *conceptual* form. Unlike the examples of tectonic axonometry that establish an anthropomorphic spatiality via their perceptual inclusion of scale, materiality, and/or context, axonometry negates isometry's horizontality, losing any connection to phenomenal space.[64] This observation is supported when comparing Figure 4 to sketches and plans of *House I,* which illustrate utility and materiality, and his sections include ground lines and scale devices. In contrast to the tectonic camp, Eisenman ascribes axonometry the purely *conceptual* role of 'unveiling invisible structures',[65] inspired by Rowe's preoccupation with the 'presence of the unseen'.[66] Furthermore, the shift from isometry's horizontality to axonometry's diagonality allows Eisenman to critique classical concepts of frontality or spatial hierarchy.[67] Unlike the Framptonian axonometry of *technē*, Eisenman's axonometry of technique emphasises 'play between orthogonal and the diagonal… to liberate architecture from the encumbrance of the tectonic of column-and-beam'.[68]

In contrast to solid projection, the wire-frame method is analytical, due to its depiction of inter-spatial relationships rather than solely the optical.[69] Eisenman appropriates the wire-frame technique in an unconventional manner, as on closer inspection, Figure 4 uses only dotted lines. While technical drawing ascribes solid lines to *perceptual* barriers, and dotted lines to non-visual or *conceptual* barriers, Eisenman finally achieves the representation of *conceptual* architectural form. To demonstrate, Figure 5 shows alternate wire-frame projections of *House I* if the form included any solid perceptual elements.

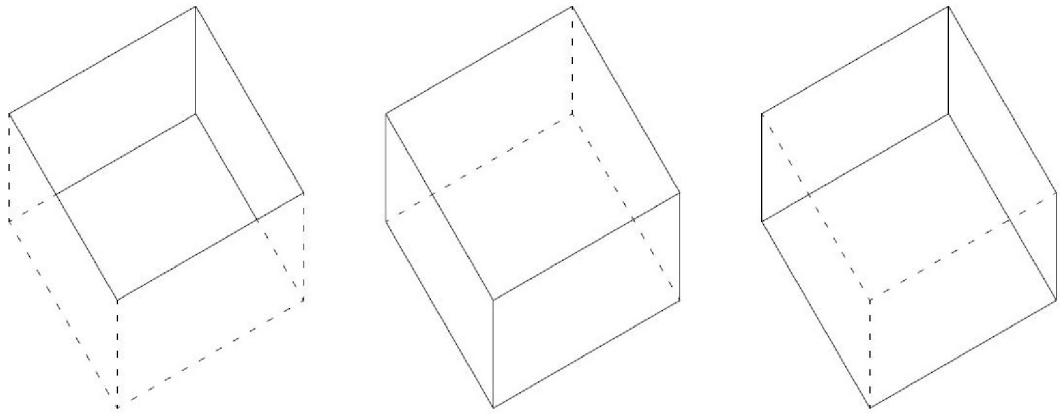

Figure 5. Axonometric of a void at ground level; solid top-down projection; solid bottom-up projection (Farrah, 2018).

A comparison of Figures 4 and 5 demonstrates that Eisenman's utilisation of only dotted lines is to also achieve spatial reversibility. This reversibility critiques Rowe's and Slutzky's 'Transparency' framework in two ways. First, where Rowe and Slutzky suggested the impression of depth in 'phenomenal transparency' was generated by two-dimensional figure-ground fluctuations,[70] *House I* critiques this 'purely optical'[71] framework, and depicts a *three-dimensional* spatial reversal. Secondly, this reversibility critiques Rowe's and Slutzky's formal and perceptual framework, which assumed a fixed, frontal point of view,[72] and positions many objective viewpoints. Eisenman simultaneously represents top-down and bottom-up views, hence there is no longer one privileged perceptual viewpoint, but many ambiguous conceptual viewpoints. Through his understanding of technical drawing methods, Eisenman projections are no longer *illustrations,* but rather, represent *theoretical* intentions.[73] Through the technology of axonometry, and the ability to represent conceptual three-dimensional form, Eisenman's oeuvre first enters the realm of architectural autonomy.

Furthermore, *House I* uses axonometry as a generative tool,[74] where Eisenman's later iterations introduce his concept of 'virtual or implied layering', which he suggests is 'not so much a literal recognition of the actual surfaces… but rather is meant to signify the virtual or implied layering which is produced'.[75] It is pertinent to look at this process to demonstrate how Eisenman achieves a conceptual *four-dimensional* representation in his third critique of Rowe's and Slutzky's framework (Figure 6).

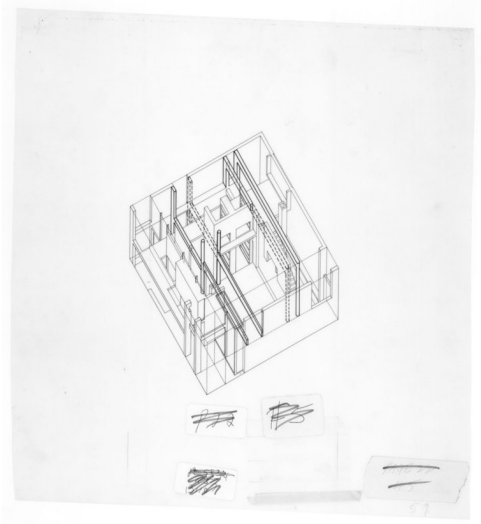

Figure 6. Exterior axonometric of *House I* (Eisenman, CCA archives, 1968).

This 'exterior axonometric' is markedly different from the 'birds-eye' projections in *British Buildings* (1965), with no suggestion of *topos*, typology, or tectonics. While the wire-frame no longer exhibits spatial reversibility, the addition of solid lines shows the volume now depicts both *perceptual* and *conceptual* elements. Again, like in Figure 4, there exist deliberate technical inconsistences: for example, with the columns and beams touching the bottom-right elevation, some are drawn correctly dotted, while others are solid. This use of lineweight conventions thus represents two parallel systems: the physical house, and the cognitive house.[76]

The final critique Eisenman conducts on Rowe's and Slutzky's analyses of facades and paintings, resulted in a 'two-dimensional phenomenology'[77] which, as I have previously demonstrated, Eisenman translates into *three* conceptual dimensions (Figure 4), here he displays his design process through axonometry to represent *four* conceptual dimensions (Figure 6).[78] Through this iterative process, through axonometry's depiction of planimetric and vertical manipulations, Eisenman's 'virtual or implied layering' come close to Kepes's definition of transparency cited by Rowe and Slutzky: as the 'simultaneous perception of different spatial locations'.[79] Through *House I*'s axonometry, Eisenman discovered a representation that - I would suggest - came closer to Kepes' concepts of 'transparency' than Rowe's and Slutzky's own two-dimensional studies. Eisenman realised that where Rowe's and Slutzky's analyses occupied a 'real space' and time, his conceptual ideas of 'virtual implied layering' could only exist within 'autonomous space'.[80] This is somewhat ironic, however, as this would be met by

criticism from Rowe in autonomy's divide between '*physique'* and '*morale',* as evident in his introduction to the exhibition *Five Architects* (1972) which exhibited *House I*.[81]

To summarise, through two technologies of architectural projection – the subversion of technical lineweight properties, and the depiction of an iterative process – Eisenman forged a novel pathway for post-modern axonometry to represent conceptual and autonomous theories. Through the examples of Frampton and Eisenman, this paper has demonstrated that comparisons of the same pre-digital projection methods, within the same architectural milieu, provide valuable understandings of the nuances within post-modern architectural theory and praxis. This study also suggests a framework in which to study other anti-technological critiques of historiography such as the representations of twenty-first century architects choosing to employ hand-drawing technologies.

---

[1] James Stirling, 'Ronchamp: Le Corbusier's Chapel and the Crisis of Rationalism', *Architectural Review*, 119, 3 (1956), 155.
[2] John Summerson, "The Case for a Theory of Modern Architecture," *RIBA Journal*, 64, 8 (1957), 307-313; and Alan Colquhoun, "Typology and Design Method (1967)'," *Perspecta,* 12 (1969), 71-74.
[3] Stirling, "Ronchamp," 161.
[4] Frampton referred to the British Townscape as 'the humanisation of the modern movement'. Kenneth Frampton, "MARS and beyond: The British Contribution to Modern Architecture," *AAQ*, 2, 10 (1970), 53.
[5] Mark Crinson and Claire Zimmerman (eds.), *Neo-avant-garde and Postmodern Postwar Architecture in Britain and Beyond* (New Haven: Yale University Press, 2010), 2.
[6] Within this paper I borrow Gevork Hartoonian's definition of post-modern as "a historical unfolding informed by the failure of the project of the historical avant-garde and the nihilism of technology." Gevork Hartoonian, *Modernity and Its Other: A Post-Script to Contemporary Architecture* (Texas: A&M University Press, 1997), 3.
[7] Marco Frascari, "The Tell-the-Tale Detail" (1984) in Kate Nesbitt (ed.), *Theorizing a New Agenda for Architecture: An Anthology of Architectural Theory 1965-1995* (New York: Princeton Architectural Press, 1996), 500.
[8] Raymond Quek, "Drawing Adam's Navel: The problem of *disegno* as creative tension between the visible and knowledgeable," in Marco Frascari, Jonathan Hale and Bradley Starkey (eds.), *From Models to Drawings: imagination and representation in architecture* (London: Routledge, 2007), 58.
[9] Jonathan Hill, "Weather architecture, weather drawing." In Frascari, Hale, and Starkey (eds.), *From Models to Drawings,* 210.
[10] Dalibor Vesely, *Architecture in the Age of Divided Representation: the question of creativity in the shadow of production* (Cambridge, MA: MIT Press, 2004), 177.
[11] Robin Evans, *Translations from Drawing to Building and Other Essays* (Cambridge, MA: MIT Press, 1997); and Robin Evans, *The Projective Cast: Architecture and its Three Geometries* (Cambridge, MA: MIT Press, 1995).
[12] Alberto Pérez-Gómez and Louise Pelletier, *Architectural Representation and the Perspective Hinge* (Cambridge, MA: MIT Press, 1997).
[13] Vesely, *Architecture in the Age*, 18. Central and inevitable to any critical architectural project is that one is "preoccupied by its status as representation, and its simultaneous commentary on that condition." Robert Somol and Sarah Whiting, "Notes around the Doppler Effect and other Moods of Modernism," *Perspecta,* 33 'Mining Autonomy' (2002), 74.
[14] Gevork Hartoonian, *Ontology of Construction: On Nihilism of Technology in Theories of Modern Architecture* (Cambridge, NY: Cambridge University Press, 1994), 2.
[15] Vesely, *Architecture in the Age*, 291.

[16] See also Diana Agrest and Stan Allen, *Practice*: *Architecture, Technique and Representation* (London: Routledge, 2003), ix.
[17] Marco Frascari deemed paper in architectural drawing as a "passive technology" and "one of the most significant technology presences in the building and design industry." Marco Frascari, "A Reflection on Paper and its Virtues Within the Material and Invisible Factures of Architecture," in Frascari, Hale, and Starkey (eds.), *From Models to Drawings,* 23-24.
[18] In Tafurian terms, the positions of Eisenman and Frampton could be classified as the difference between the ideologies of "architecture as criticism" and "criticism as project." Manfredo Tafuri, *Theories and History of Architecture*. Translated by Giorgio Verrecchia (London: Granada Publishing, 1980), 133. Hartoonian has observed Eisenman's use of Tafurian "operative techniques." Gevork Hartoonian, *Modernity and Its Other: A Post-Script to Contemporary Architecture* (Texas: A&M University Press, 1997), 42.
[19] Kenneth Frampton, "Reflections of the Autonomy of Architecture: A Critique of Contemporary Production," in Diane Ghirardo (ed.), *Out of Site: A Social Criticism of Architecture* (Seattle: Bay Press, 1991), 20. Hartoonian also understands Eisenman's Deconstructivism as "dispensing with the tectonic dimension of architecture." Hartoonian, *Modernity and Its Other*, 67.
[20] For example, see Kenneth Frampton, "The Dom-ino Syndrome," *Oppositions* 15/16 "Le Corbusier 1905-1933" (1979), 59; and Peter Eisenman, "Aspects of Modernism: Maison Dom-ino and the Self-Referential Sign," *Oppositions,* 15/16 (1979), 118-128.
[21] The inclusion of Aalto and Wright was deemed compulsory by Rowe. Thomas Weaver, "Peter Eisenman in conversation with Thomas Weaver," *AA Files,* 74 (2017), 157.
[22] Peter Eisenman and Robert Somol (eds.), *Diagram Diaries* (London: Thames & Hudson, 1999), 54.
[23] Kenneth Frampton, "Eisenman Revisited: Running Interference," in Arie Graafland (ed.), *Peter Eisenman: recent projecten = recent projects* (SUN, Amsterdam: 1989), 48.
[24] For critiques of Eisenman's thesis text, see Louis Martin, "The Search for a Theory in Architecture: Anglo-American Debates, 1957-1973," Ph.D. diss. (Princeton University, New Jersey, 2002); Arie Graafland, "Peter Eisenman: The Formal Basis of Modern Architecture," *Footprint,* 1 'Trans-disciplinary' (2007), 93-96; and Robert Somol, "Dummy Text," in Eisenman and Somol (eds.), *Diagram Diaries,* 6-25.
[25] Eisenman, *Diagram Diaries,* 53.
[26] Desley Luscombe, "Architectural Concepts in Peter Eisenman's Axonometric Drawings of House VI," *The Journal of Architecture* 19, 4 (2014), 560-611. See also Desley Luscombe, "Illustrating Architecture: the spatio-temporal dimension of Gerrit Rietveld's representations of the Schröder House," *The Journal of Architecture* 22, 5 (2017), 899-932.
[27] See Colin Rowe and Robert Slutzky, "Transparency: Literal and Phenomenal," *Perspecta,* 8 (1963), 45-54.
[28] Yves-Alain Bois, "Metamorphosis of Axonometry," *Daidalos,* 1 (1981), 42. Also Agrest and Allen, *Practice*, 167.
[29] Edward Robbins, "The Social Uses of Drawing: Drawing and Architectural Practice," in Edward Robbins (eds.), *Why Architects Draw* (Cambridge, MA: MIT Press, 1994), 7.
[30] Pérez-Gómez and Pelletier have called these 'formal, programmatic, temporal, or experiential'. Pérez-Gómez and Pelletier, *Architectural Representation*, 3. Also "the discourse on depth and distancing remains crucial for architecture, particularly in the context of a technological world fuelled by an obsession to close (or ignore) the space between the body and the world." Pérez-Gómez and Pelletier, *Architectural Representation*, 11.
[31] Pérez-Gómez and Pelletier, *Architectural Representation*, 6. Frascari also considers the act of drawing as 'poetical' and 'ontological', and intimately related to the perceptual senses of the individual. Marco Frascari, "Lines as Architectural Thinking," *Architectural Theory Review*, 14, 3 (2009), 211.
[32] Massimo Scolari, "Elements for a History of Axonometry," *AD* 5, 5-6 (1985), 72. Sciences that contributed to "the formation of modern technique and eventually to technology," curiously, utilised the isometric or axonometric projection. These drawings, such as those found in mechanics, must be understood according to Vesely as not a "utilitarian or technical interest," but rather "a metaphysical quest." See Vesely, *Architecture in the Age*, 292-296.
[33] Stan Allen, "Constructing With Lines: on projection," in Allen and Agrest, *Practice*, 26.
[34] Alberto Pérez-Gómez, "Architecture as Drawing," *Journal of Architectural Education*, 35, 2 (1982), 6. For Frampton, Evans, Allen, Frascari, Pérez-Gómez, and Pelletier, axonometry's measurability represent tectonic and constructive concepts, as the drawing can be reversible and

ambiguous in orientation, it cannot be 'spatially ambiguous'. Frampton has stated, "axonometric drawing has the virtue of maintaining the exact dimensions throughout and also indicating a spatial concept." Kenneth Frampton, email to author, 6 July 2017. See also Robin Evans, "Projection," in Eve Blau and Edward Kaufman (eds.), *Architecture and Its Image* (Cambridge, MA: MIT Press, 1989), 26; and Allen, "Constructing With Lines: on projection." Pérez-Gómez and Pelletier also consider the role of drawing as "the embodiment of architectural ideas," and note that "the architect seems condemned to make either poetic (perhaps romantic) drawings critical (perhaps senseless) ones." Pérez-Gómez and Pelletier, *Architectural Representation*, 313.

[35] Somol, "Dummy Text*,"* 16.

[36] Luscombe considers this the "conceptual and analytical inquiry privileged through techniques of the axonometric." Luscombe, "Architectural Concepts," 561. Robert A. M. Stern has also noted the axonometrics ability to denote a "conceptual rather than a perceptual view of building." Robert A. M. Stern, "Drawing Towards a More Modern Architecture," *AD,* 47, 6. "America Now: Drawing Towards a More Modern Architecture "(1977), 383.

[37] Graafland, "Peter Eisenman," 95.

[38] Alan Christ, "Theo van Doesburg and the Undescriptive Qualities of the Axonometric," in James S. Ackerman and Wolfgang Jung (eds.), *Conventions of Architectural Drawing: Representation and Misrepresentation* (Cambridge, MA: Harvard University Graduate School of Design: 2000), 160.

[39] Rosalind Krauss, "Death of a Hermeneutic Phantom: Materialization of the Sign in the Work of Peter Eisenman," in Peter Eisenman, Rosalind Krauss, and Manfredo Tafuri (eds.), *House of Cards* (New York: Oxford University Press, 1987), 171.

[40] Kenneth Frampton, *Studies in Tectonic Culture: The Poetics of Construction in Nineteenth and Twentieth Century Architecture* (2nd ed. Cambridge, MA: MIT Press, 1996), 2.

[41] Charles Jencks, "Recent British Architecture: Pop-Non Pop," in *Modern Movements in Architecture* (2nd ed. London: Penguin Books, 1985), 263.

[42] Kenneth Frampton, "Maisonettes in Bayswater, London," *AD,* 34 (September 1964), 442-448. It is likely Frampton drew Figure 1 as in the same issue he drew an exterior axonometric for the cover of AD.

[43] Jencks, "Recent British Architecture," 260.

[44] Anthony Vidler, "Diagrams of Diagrams: Architectural Abstraction and Modern Representation," *Representations,* 72 (Autumn 2000), 15.

[45] Colin Rowe, "Character and Composition; or Some Vicissitudes of Architectural Vocabulary in the Nineteenth Century (1955)," *Oppositions,* 2 (1974), 42-60. I would suggest that Rowe's use of the term 'character', an eighteenth-century picturesque concept, is a critique of Townscape's lack of planimetric composition.

[46] Colin Rowe, "Review: Forms and Functions of Twentieth Century Architecture by Talbot Hamlin," *The Art Bulletin* 35, 2 (June 1953), 173.

[47] Rowe's criticism of architecture "inspired by a pictorial idea" that results in "a species of architectural scenery," can be seen as parallel to Frampton's critique of architecture reduced to "scenography… nothing more than a stage set." See Colin Rowe, "Character and Composition," 42-60; and Kenneth Frampton, "The Isms of Architecture" (lecture, Pidgeon Digital Archive, 1982). On Frampton's counter-position to Townscape, see also Sally Farrah, "Representation as Quotation: The Verbal and Visual Languages of Kenneth Frampton in *Architectural Design*, 1962-1964,' in Gevork Hartoonian and John Ting (eds.), *Proceedings of the Society of Architectural Historians, Australia and New Zealand: 34, Quotation* (Canberra: SAHANZ, 2017), 143-154.

[48] Vesely, *Architecture in the Age*, 179. Jencks noted the utilisation of axonometry in *British Buildings* (1965) united the schemes in their awareness of architecture as an intellectual discourse. Jencks, "Recent British Architecture," 263. Similarly, Luscombe observed Eisenman's use of axonometry portrays "the intellectual contribution of the architectural act." Luscombe, "Architectural concepts," 560.

[49] Luscombe, "Illustrating Architecture," 899.

[50] Luscombe, "Architectural Concepts," 586.

[51] Luscombe, "Architectural Concepts," 587.

[52] Hilary Bryon, "Revolutions in Space: parallel projections in the early modern era," *ARQ,* 12, 3/4 (2008), 344.

[53] Bryon, "Revolutions in Space," 344. This same axonometric language is evident in Frampton's exhaustive account of Pierre Chareau's Maison de Verre, which in collaboration with Robert

Vickery and Michael Carapetian, he commenced in July 1965. See Frampton, "Maison de Verre," *Perspecta,* 12 (1969), 77-109.
[54] Colquhoun's writing of the 1950s and 1960s represents his anti-picturesque and anti-technological position. *See* Alan Colquhoun, "Letter: Twentieth Century Picturesque," *Architectural Review,* 116 (July 1954), 2; and Alan Colquhoun, "Symbolic and Literal Aspects of Technology," *AD,* 32, 8 (November 1962), 508-509.
[55] Kenneth Frampton, "Introduction to Character and Composition (1955)," *Oppositions,* 2 (1974), 41.
[56] Gevork Hartoonian, "Critical Regionalism: whatever happened to autonomy?" *Fusion* 4 (2014).
[57] Peter Eisenman, *The Formal Basis of Modern Architecture* (Baden: Lars Müller Publishers, 2006), 21.
[58] Eisenman, *The Formal Basis*, 15.
[59] I suggest these are traced photographs as Eisenman uses this technique in Peter Eisenman, "Real and English: The Destruction of the Box," *Oppositions,* 4 (1974), 6-34.
[60] Martin, "The Search for a Theory of Architecture," 536.
[61] Krauss, "Death of a Hermeneutic Phantom," 171.
[62] Krauss, "Death of a Hermeneutic Phantom," 171.
[63] Gyorgy Kepes, *The Language of Vision* (Paul Theobald and Co., Chicago: 1964), 77.
[64] Yves-Alain Bois, "From Minus Infinity to Plus Infinity: Axonometry, or Lissitzky's Mathematical Paradigm," in Jan Debbaut (ed.), *El Lissitzky: 1890-1941: architect painter photographer typographer* (Thames & Hudson: London, 1990), 31.
[65] Stefano Corbu, *From Formalism to Weak Form: The Architecture and Philosophy of Peter Eisenman* (London: Ashgate, 2014), 82.
[66] Peter Eisenman, "Bifurcating Rowe," in Emmanuel Petit (ed.), *Reckoning with Colin Rowe: Ten Architects Take Position* (New York: Routledge, 2015), 57.
[67] Luscombe, "Illustrating Architecture," 910.
[68] Gevork Hartoonian, "Peter Eisenman: in search of degree zero architecture," in Hartoonian, *Crisis of the Object: The Architecture of Theatricality* (London: Routledge, 2006), 59.
[69] Luscombe, "Architectural Concepts," 586.
[70] Detlef Mertins, "Transparency: Autonomy and Relational." *AA Files, 32* (Autumn 1996), 5.
[71] Mertins, "Transparency," 4.
[72] Rosemary Haag Bletter, "Opaque Transparency," *Oppositions,* 13 (Summer 1978), 123-124.
[73] Bryon, 'Revolutions in Space', 345. See also Peter Eisenman, "Cardboard Architecture: House I', in Kenneth Frampton and Silvia Kolbowski (eds.), *Five Architects: Eisenman, Graves, Gwathmey, Hejduk, Meier* (New York: Oxford University Press, 1975), 15.
[74] Somol, "Dummy Text," 25.
[75] Eisenman, 'Cardboard architecture: House I'," 15.
[76] Krauss, "Death of a Hermeneutic Phantom," 175.
[77] Mertins, "Transparency," 3.
[78] In Eisenman's words on Rowe's influence: "I both carried this education forward and needed to react against it." Peter Eisenman, "The Last Grand Tourist: Travels with Colin Rowe," *Perspecta,* 41 (2008), 137.
[79] Kepes, *The Language of Vision*, 77.
[80] Mertins, "Transparency," 9.
[81] Colin Rowe, "Introduction," in Frampton and Kolbowski (eds.), *Five Architects,* 3-7.